Panasonic®

Operating Instructions

Memory Card Camera-Recorder

Model No. **AU-V35LT1G**

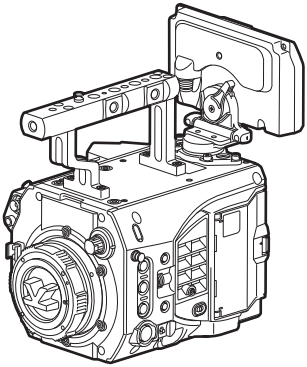

ENGLISH	Before using this product, be sure to read “Read this first!” (pages 3 to 6). For more information, please visit the Panasonic website **(http://pro-av.panasonic.net/en/manual/index.html)**, and refer to the Operating Guide for VariCam LT.
DEUTSCH	Bitte lesen Sie sorgfältig die „Bitte lesen Sie zuerst diesen Hinweis!“ vor der Nutzung dieses Produkts. (Seiten 7 bis 8).
FRANÇAIS	Avant d’utiliser cet appareil, assurez-vous de lire la section « Lire ces informations en premier ! » (pages 9 à 10).
ITALIANO	Prima di utilizzare il prodotto, assicurarsi di leggere “Leggere prima quanto segue!” (pagine 11 a 12).
ESPAÑOL	Antes de usar este producto, asegúrese de leer “Lea esto primero” (páginas 13 a 14).

Please carefully read this manual, and save this manual for future use.

ENGLISH

Português	Consulte o seguinte website para as informações de segurança e importantes notificações sobre o produto.
Nederlands	Ga naar de volgende website voor veiligheidsinformatie en belangrijke meldingen over het product.
Dansk	Besøg følgende webside for sikkerhedsinformation og vigtige bemærkninger vedrørende produktet.
Svenska	Besök följande webbplats för säkerhetsinformation och viktiga meddelanden om produkten.
Suomi	Käy seuraavalla verkkosivulla saadaksesi turvallisuustietoja ja tärkeitä tietoja liittyen laitteeseen.
Ελληνικά	Για πληροφορίες σχετικά με θέματα ασφάλειας και σημαντικές ειδοποιήσεις που αφορούν το προϊόν σας, επισκεφτείτε τον ιστότοπο που ακολουθεί.
Polski	Informacje o bezpieczeństwie i ważne informacje o produkcie znajdują się w poniższej witrynie internetowej.
Magyar	A termékkel kapcsolatos biztonsági információkért és fontos értesítésekért látogasson el az alábbi weboldalra.
Čeština	Na následujícím webu najdete bezpečnostní informace a důležité poznámky k tomuto produktu.
български	Посетете следния уебсайт относно информация за безопасността и важни уведомления за продукта.
Eesti	Toodet puudutava ohutusteabe ja oluliste märkuste saamiseks külastage järgmist veebilehte.
Hrvatski	Za sigurnosne informacije i važne obavijesti o proizvodu posjetite sljedeću internetsku stranicu.
Latviešu	Lai iegūtu informāciju par drošību un skatītu svarīgus paziņojumus par šo produktu, apmeklējiet tālāk norādīto tīmekļa vietni.
Lietuvos	Jei reikia saugos informacijos ir svarbių pranešimų apie gaminį, apsilankykite toliau nurodytoje svetainėje.
Română	Vizitați următoarea pagină web pentru informaţii de securitate și notificări importante cu privire la produs.
Slovenščina	Za varnostne informacije in pomembna obvestila v zvezi z izdelkom obiščite naslednje spletno mesto.
Slovensky	Pre bezpečnostné informácie a dôležité oznámenia súvisiace s produktom navštívte túto webovú stránku.

http://pro-av.panasonic.net/en/manual/index.html

Read this first!

indicates safety information.

WARNING:
- To reduce the risk of fire, do not expose this equipment to rain or moisture.
- To reduce the risk of fire, keep this equipment away from all liquids. Use and store only in locations which are not exposed to the risk of dripping or splashing liquids, and do not place any liquid containers on top of the equipment.

WARNING:
Always keep memory cards (optional accessory) or accessories (mounting screws and control panel mounting part clamping screws) out of the reach of babies and small children.

CAUTION:
Do not remove panel covers by unscrewing.
No user serviceable parts inside. Refer servicing to qualified service personnel.

CAUTION:
To reduce the risk of fire and annoying interference, use the recommended accessories only.

CAUTION:
To reduce the risk of fire, refer mounting of the optional interface boards to qualified service personnel.

CAUTION:
In order to maintain adequate ventilation, do not install or place this unit in a bookcase, built-in cabinet or any other confined space. To prevent risk of fire hazard due to overheating, ensure that curtains and any other materials do not obstruct the ventilation.

CAUTION:
Do not lift the unit by its handle while the tripod is attached. When the tripod is attached, its weight will also affect the unit's handle, possibly causing the handle to break and hurting the user. To carry the unit while the tripod is attached, take hold of the tripod.

CAUTION:
Excessive sound pressure from earphones and headphones can cause hearing loss.

CAUTION:
Do not leave the unit in direct contact with the skin for long periods of time when in use. Low temperature burn injuries may be suffered if the high temperature parts of this unit are in direct contact with the skin for long periods of time.
When using the equipment for long periods of time, make use of the tripod.

CAUTION:
A coin type battery is installed inside of the unit.
Do not store the unit in temperatures over 60 °C (140 °F).
Do not leave the unit in an automobile exposed to direct sunlight for a long period of time with doors and windows closed.

CAUTION:
Do not jar, swing, or shake the unit by its handle while the conversion lens or another accessory is attached.
Due to the added weight of the conversion lens, any strong jolt to the handle may damage the unit or result in personal injury.

indicates safety information.

FCC NOTICE (USA)

CAUTION:

This equipment has been tested and found to comply with the limits for a class A digital device, pursuant to Part 15 of the FCC Rules. These limits are designed to provide reasonable protection against harmful interference when the equipment is operated in a commercial environment. This equipment generates, uses, and can radiate radio frequency energy and, if not installed and used in accordance with the instruction manual, may cause harmful interference to radio communications.
Operation of this equipment in a residential area is likely to cause harmful interference in which case the user will be required to correct the interference at his own expense.

FCC Warning:

To assure continued FCC emission limit compliance, follow the attached installation instructions and the user must use only shielded interface cables when connecting to host computer or peripheral devices. Also, any unauthorized changes or modifications to this equipment could void the user's authority to operate this device.

NOTIFICATION (Canada)

CAN ICES-3 (A)/NMB-3(A)

For Turkey

AEEE Yönetmeliğine Uygundur.
AEEE Complies with Directive of Turkey.

This equipment is in compliance with the essential requirements and other relevant provisions of Directive 1999/5/EC.
Customers can download a copy of the original DoC for this product from our DoC server:
http://www.ptc.panasonic.de/

Manufactured by: Panasonic Corporation, Osaka, Japan
Importer's name and address of pursuant to EU rules:
Panasonic Marketing Europe GmbH
Panasonic Testing Centre
Winsbergring 11, 22525 Hamburg, Germany

TO REMOVE BATTERY

Main Power Battery (Ni-Cd / Ni-MH / Li-ion Battery)

- To detach the battery, please proceed in the reverse order of the installation method described in this manual.
- If a battery made by any other manufacturer is to be used, check the Operating Instructions accompanying the battery.

Back-up Battery (Lithium Battery)

- For the removal of the battery for disposal at the end of its service life, please consult your dealer.

Battery recycling symbol (valid only in Taiwan)

臺灣限定的廢電池回收標識。

廢電池請回收

Декларація про Відповідність
Вимогам Технічного Регламенту Обмеження Використання деяких Небезпечних Речовин в електричному та електронному обладнанні
(затвердженого Постановою №1057 Кабінету Міністрів України)

Виріб відповідає вимогам Технічного Регламенту Обмеження Використання деяких Небезпечних Речовин в електричному та електронному обладнанні (ТР ОВНР).

Вміст небезпечних речовин у випадках, не обумовлених в Додатку №2 ТР ОВНР, :

1. свинець(Pb) – не перевищує 0,1 % ваги речовини або в концентрації до 1000 частин на мільйон;
2. кадмій (Cd) – не перевищує 0,01 % ваги речовини або в концентрації до 100 частин на мільйон;
3. ртуть(Hg) – не перевищує 0,1 % ваги речовини або в концентрації до 1000 частин на мільйон;
4. шестивалентний хром (Cr6+) – не перевищує 0,1 % ваги речовини або в концентрації до 1000 частин на мільйон;
5. полібромбіфеноли (PBB) – не перевищує 0,1 % ваги речовини або в концентрації до 1000 частин на мільйон;
6. полібромдефенілові ефіри (PBDE) – не перевищує 0,1 % ваги речовини або в концентрації до 1000 частин на мільйон.

Disposal of Old Equipment and Batteries
Only for European Union and countries with recycling systems
These symbols on the products, packaging, and/or accompanying documents mean that used electrical and electronic products and batteries must not be mixed with general household waste.
For proper treatment, recovery and recycling of old products and used batteries, please take them to applicable collection points in accordance with your national legislation.

By disposing of them correctly, you will help to save valuable resources and prevent any potential negative effects on human health and the environment.

EU

For more information about collection and recycling, please contact your local municipality, dealer or supplier.

Penalties may be applicable for incorrect disposal of this waste, in accordance with national legislation.

Note for the battery symbol (bottom symbol):
This symbol might be used in combination with a chemical symbol. In this case it complies with the requirement set by the Directive for the chemical involved.

Bitte lesen Sie zuerst diesen Hinweis!

ist die Sicherheitsinformation.

WARNUNG:

- Setzen Sie dieses Gerät zur Reduzierung der Brandgefahr weder Nässe noch Feuchtigkeit aus.
- Um die Brandgefahr zu reduzieren, muss dieses Gerät von allen Flüssigkeiten ferngehalten werden. Vermeiden sie Gebrauch und Lagerung des Gerätes an Orten, an denen die Gefahr besteht, dass es mit Flüssigkeiten betropft oder bespritzt wird, und stellen sie keine Flüssigkeitsbehälter auf das Gerät.

WARNUNG:

Halten Sie Speicherkarten (optionales Zubehör) und Zubehörteile (Befestigungsschrauben und Klemmschrauben für die Befestigungsteile des Bedienfelds) stets fern von Babys und Kleinkindern.

VORSICHT:

Öffnen Sie nicht das Gerät durch Abschrauben von Gehäuseteilen.
Im Geräteinneren befinden sich keine Teile, die vom Benutzer gewartet werden können.
Wartungs- und Reparaturarbeiten grundsätzlich autorisiertem Kundendienstpersonal überlassen

VORSICHT:

Verwenden Sie nur das empfohlene Zubehör, um die Gefahr von Bränden sowie Störungen zu reduzieren.

VORSICHT:

Um die Brandgefahr zu reduzieren, Überlassen sie den einbau der gesonderten Schnittstellenkarte qualifiziertem wartungspersonal.

VORSICHT:

Um eine ausreichende Belüftung zu gewährleisten, dieses Gerät nicht in einem Bücherregal, Einbauschrank oder an einem anderen engen Platz aufstellen.
Stellen Sie sicher, dass die Ventilationsöffnungen im Gehäuse nicht durch Vorhänge oder andere Materialien blockiert werden; anderenfalls besteht die Gefahr von Bränden aufgrund von Überhitzung.

VORSICHT:

Heben Sie die Kamera nicht am Handgriff an, während sie am Stativ befestigt ist. Das zusätzliche Gewicht des Stativs kann dazu führen, dass der Handgriff abbricht, was eine Verletzung des Benutzers zur Folge haben kann. Ergreifen Sie daher stets das Stativ, wenn die Kamera mit daran befestigtem Stativ getragen werden soll.

VORSICHT:

Übermäßiger Schalldruck von Kopfhörern und Ohrhörern kann zum Verlust des Hörvermögens führen.

VORSICHT:

Die Einheit bei längerem Gebrauch nicht direkt mit der Haut berühren.
Verbrennungen durch niedrige Temperaturen sind möglich, wenn die heißen Komponenten dieser Einheit für lange Zeit in direktem Hautkontakt stehen.
Bei längerer Verwendung der Ausrüstung das Stativ einsetzen.

VORSICHT:

Im Gerät ist eine Knopfzelle installiert.
Bewahren Sie das Gerät nicht bei Temperaturen über 60 °C auf.
Lassen Sie das Gerät nicht in einem Auto liegen, das für längere Zeit direktem Sonnenlicht ausgesetzt ist und bei dem Türen und Fenster geschlossen sind.

VORSICHT:

Schwingen Sie die Kamera nicht am Handgriff, wenn die Konverterlinse oder anderes Zubehör montiert ist, und setzen Sie sie keinen Stößen oder ruckartigen Bewegungen aus.
Aufgrund des Gewichts der Konverterlinse können durch Stoß- oder Ruckeinwirkung auf den Handgriff Schäden an der Kamera oder Verletzungen verursacht werden.

Hergestellt von: Panasonic Corporation, Osaka, Japan
Name und Adresse des Importeurs gemäß EU-Bestimmungen:
Panasonic Marketing Europe GmbH
Panasonic Testing Centre
Winsbergring 11, 22525 Hamburg, Deutschland

ENTFERNEN DER BATTERIE

Hauptbatterie (Ni-Cd / Ni-MH / Li-ion Batterie)

- Um die Batterie zu entfernen, gehen Sie in der umgekehrten Reihenfolge wie die der in dieser Bedienungsanleitung beschriebenen Installation vor.
- Wenn eine Batterie eines anderen Herstellers verwendet werden soll, überprüfen Sie die Bedienungsanleitung der Batterie.

Back-Up-Batterie (Lithium-Batterie)

- Zur Entfernung und Entsorgung der Batterie nach ihrem Lebenszyklus, fragen Sie bitte Ihren Händler.

EU

Entsorgung von Altgeräten und Batterien
Nur für die Europäische Union und Länder mit Recyclingsystemen
Dieses Symbol, auf den Produkten, der Verpackung und/oder den Begleitdokumenten, bedeutet, dass gebrauchte elektrische und elektronische Produkte sowie Batterien nicht in den allgemeinen Hausmüll gegeben werden dürfen.
Bitte führen Sie alte Produkte und verbrauchte Batterien zur Behandlung, Aufarbeitung bzw. zum Recycling gemäß den gesetzlichen Bestimmungen den zuständigen Sammelpunkten zu.
Indem Sie diese Produkte und Batterien ordnungsgemäß entsorgen, helfen Sie dabei, wertvolle Ressourcen zu schützen und eventuelle negative Auswirkungen auf die menschliche Gesundheit und die Umwelt zu vermeiden.
Für mehr Informationen zu Sammlung und Recycling, wenden Sie sich bitte an Ihren örtlichen Abfallentsorgungsdienstleister, Händler oder Zulieferer.
Gemäß Landesvorschriften können wegen nicht ordnungsgemäßer Entsorgung dieses Abfalls Strafgelder verhängt werden.

Hinweis für das Batteriesymbol (Symbol unten):
Dieses Symbol kann in Kombination mit einem chemischen Symbol abgebildet sein. In diesem Fall erfolgt dieses auf Grund der Anforderungen derjenigen Richtlinien, die für die betreffende Chemikalie erlassen wurden.

Lire ces informations en premier !

Informations concernant la sécurité.

AVERTISSEMENT:

- Pour réduire les risques d'incendie, évitez d'exposer cet appareil à la pluie ou à l'humidité.
- Pour réduire les risques d'incendie, éloignez l'appareil des liquides — utiliser et ranger uniquement dans un endroit ne risquant pas de recevoir des gouttes ou d'être aspergé de liquides, et ne pas mettre de récipient renfermant des liquides sur le dessus de l'appareil.

AVERTISSEMENT:

Tenez toujours les cartes mémoire (accessoires en option) ou accessoires (vis de montage et vis de serrage des pièces de montage du panneau de commande) hors de portée des bébés et jeunes enfants.

ATTENTION:

Ne pas dévisser le couvercle.
Il ne se trouve à l'intérieur aucune pièce qui puisse être réparée par l'utilisateur.
Confier toute réparation à un personnel qualifié.

ATTENTION:

Pour réduire les risques d'incendie et des interférences nuisibles, utilisez uniquement les accessoires recommandés.

ATTENTION:

Pour réduire les risques d'incendie, Confiez le montage de la carter d'interface en option à un technicien spécialisé.

ATTENTION:

Pour maintenir une bonne ventilation, ne pas installer ni placer l'appareil dans une étagère, un meuble encastré ni aucun endroit confiné. Pour éviter tout risque d'incendie dû à une surchauffe, vérifiez qu'aucun rideau ni aucun autre matériau ne fait obstacle à la ventilation.

ATTENTION:

Ne pas soulever l'appareil par sa poignée alors que le trépied est fixé. Comme le poids du trépied s'exerce aussi sur la poignée de l'appareil lorsqu'il est fixé, vous risqueriez de casser la poignée et de vous blesser. Pour transporter l'appareil lorsque le trépied est fixé, tenir le trépied.

ATTENTION:

Une trop grande pression sonore dans les écouteurs ou le casque peut provoquer une perte d'audition.

ATTENTION:

Ne laissez pas l'appareil au contact direct de la peau de façon prolongée lors de l'utilisation.
Des brûlures dues aux basses températures pourraient résulter si les parties de cet appareil sont en contact direct avec la peau de façon prolongée.
Quand vous utilisez l'appareil de façon prolongée, utilisez le trépied.

ATTENTION:

Une pile de type bouton est installée à l'intérieur de l'appareil.
Ne rangez pas l'appareil à des températures supérieures à 60 °C.
Ne laissez pas l'appareil dans une voiture exposée à la lumière directe du soleil pendant une période prolongée avec les portes et les vitres fermées.

ATTENTION:

Ne faites pas trembler ou osciller l'appareil et ne le secouez pas par la poignée lorsque l'objectif de conversion ou un autre accessoire est fixé.
À cause du poids de l'objectif de conversion, une rude secousse à la poignée risque d'endommager l'appareil ou de provoquer des blessures personnelles.

NOTIFICATION (Canada)

CAN ICES-3 (A)/NMB-3(A)

Fabriqué par : Panasonic Corporation, Osaka, Japon
Nom et adresse de l'importateur en accord avec les règlements de l'Union Européenne :
Panasonic Marketing Europe GmbH
Panasonic Testing Centre
Winsbergring 11, 22525 Hamburg, Allemagne

POUR ENLEVER LA BATTERIE

Batterie d'alimentation principale (batterie Ni-Cd / Ni-MH / Li-ion)

- Pour enlever la batterie, procédez dans le sens inverse de la procédure de mise en place décrite dans le présent manuel.
- En cas d'utilisation d'une batterie fabriquée par un autre fabricant, contrôlez le Mode d'emploi fourni avec la batterie.

Batterie de secours (batterie au lithium)

- Pour l'enlèvement de la batterie en vue de son élimination à la fin de sa durée d'utilisation, veuillez consulter votre revendeur.

EU

L'élimination des équipements et des batteries usagés
Applicable uniquement dans les pays membres de l'Union européenne et les pays disposant de systèmes de recyclage.
Apposé sur le produit lui-même, sur son emballage, ou figurant dans la documentation qui l'accompagne, ce pictogramme indique que les piles, appareils électriques et électroniques usagés, doivent être séparées des ordures ménagères.
Afin de permettre le traitement, la valorisation et le recyclage adéquats des piles et des appareils usagés, veuillez les porter à l'un des points de collecte prévus, conformément à la législation nationale en vigueur.
En les éliminant conformément à la réglementation en vigueur, vous contribuez à éviter le gaspillage de ressources précieuses ainsi qu'à protéger la santé humaine et l'environnement.
Pour de plus amples renseignements sur la collecte et le recyclage, veuillez vous renseigner auprès des collectivités locales, votre revendeur ou fournisseur.
Le non-respect de la réglementation relative à l'élimination des déchets est passible d'une peine d'amende.

Note relative au pictogramme à apposer sur les piles (pictogramme du bas) :
Si ce pictogramme est combiné avec un symbole chimique, il répond également aux exigences posées par la Directive relative au produit chimique concerné.

Leggere prima quanto segue!

sono le informazioni sulla sicurezza.

ATTENZIONE:

- Per ridurre il pericolo di incendio, non esporre questa apparecchiatura a pioggia o umidità.
- Per ridurre il rischio d'incendio, tenere questo prodotto lontano da tutti i liquidi. Usarlo e conservarlo soltanto in luoghi che non siano esposti a gocciolamenti o spruzzi di liquidi, e non mettervi sopra recipienti di liquidi.

ATTENZIONE:

Conservare sempre schede di memoria (accessorio opzionale) o altri accessori (viti di montaggio e viti di serraggio per la parte di montaggio del pannello di controllo) fuori dalla portata dei bambini.

PRECAUZIONE:

Non togliere il coperchio svitandolo.
All'interno non ci sono parti riparabili dall'utente.
Per le riparazioni, rivolgersi a personale tecnico qualificato.

PRECAUZIONE:

Per ridurre il pericolo di incendio e di fastidiose interferenze, usare soltanto gli accessori raccomandati.

PRECAUZIONE:

Per ridurre il pericolo d'incendio, il montaggio delle scheda di interfaccia opzionale deve essere eseguito da un tecnico qualificato.

PRECAUZIONE:

Per assicurare una buona ventilazione, non installare o sistemare questo apparecchio in uno scaffale, mobile incorporato od altro spazio chiuso. Per evitare il pericolo di incendio a causa di un surriscaldamento, accertarsi che tende o altri materiali non ostacolino la ventilazione.

PRECAUZIONE:

Non sollevare l'unità per il suo manico mentre il treppiede è attaccato. Quando il treppiede è attaccato, il suo peso ha effetto anche sul manico dell'unità, con pericolo che possa rompersi e causare un incidente all'utente. Per il trasporto dell'unità con il treppiede attaccato, prenderla per il treppiede.

PRECAUZIONE:

L'uso di cuffie e auricolari a volume sonoro elevato può causare danni all'udito.

PRECAUZIONE:

Non lasciare l'unità a diretto contatto con la pelle per un periodo di tempo prolungato durante l'uso.
In caso di un prolungato contatto diretto fra le parti di questa unità con elevate temperature e la pelle potrebbero verificarsi ustioni da bassa temperatura.
Quando si utilizza questo dispositivo per un periodo di tempo prolungato, fare uso del treppiede.

PRECAUZIONE:

All'interno dell'unità è installata una batteria di tipo a moneta.
Non conservare l'unità a temperature superiori a 60 °C.
Non lasciare l'unità per lunghi periodi di tempo in automobili esposte alla luce diretta del sole, con sportelli e finestrini chiusi.

PRECAUZIONE:

Quando sulla videocamera è montata una lente di conversione o un altro accessorio è necessario prestare attenzione a non scuotere, sballottare o urtare la videocamera.
A causa del maggior peso apportato dalla lente di conversione, un eventuale forte scossone della videocamera può causare danni all'apparecchio stesso o alle persone.

Fabbricato da: Panasonic Corporation, Osaka, Giappone
Nome e indirizzo dell'importatore in conformità con le normative UE:
Panasonic Marketing Europe GmbH
Panasonic Testing Centre
Winsbergring 11, 22525 Hamburg, Germania

PER RIMUOVERE LA BATTERIA

Batteria di almentazione (batteria Ni-Cd / Ni-MH / ioni di litio)

- Per estrarre la batteria, procedere nell'ordine inverso rispetto alla procedura di installazione descritta nel presente manuale.
- Se si utilizza una batteria di altra marca, verificare le istruzioni d'uso allegate alla batteria.

Batteria di riserva (batteria al litio)

- Per la rimozione della batteria ai fini del suo smaltimento alla fine del ciclo vitale, consultare il proprio rivenditore.

EU

Smaltimento di vecchie apparecchiature e batterie usate
Solo per Unione Europea e Nazioni con sistemi di raccolta e smaltimento
Questi simboli sui prodotti, sull'imballaggio e/o sulle documentazioni o manuali accompagnanti i prodotti indicano che i prodotti elettrici, elettronici e le batterie usate non devono essere buttati nei rifiuti domestici generici.
Per un trattamento adeguato, recupero e riciclaggio di vecchi prodotti e batterie usate vi invitiamo a portarli negli appositi punti di raccolta secondo la legislazione vigente nel vostro paese.
Con uno smaltimento corretto, contribuirete a salvare importanti risorse e ad evitare i potenziali effetti negativi sulla salute umana e sull'ambiente.
Per ulteriori informazioni su raccolta e riciclaggio, vi invitiamo a contattare il vostro comune, rivenditore o fornitore.
Lo smaltimento non corretto di questi rifiuti potrebbe comportare sanzioni in accordo con la legislazione nazionale.

Note per il simbolo batterie (simbolo sotto):
Questo simbolo può essere usato in combinazione con un simbolo chimico. In questo caso è conforme ai requisiti indicati dalla Direttiva per il prodotto chimico in questione.

Lea esto primero

indica información de seguridad.

ADVERTENCIA:

- Para reducir el riesgo de producir un incendio, no exponga este equipo a la lluvia ni a la humedad.
- Para reducir el riesgo de incendio, mantenga este equipo alejado de cualquier líquido. Utilícelo y guárdelo solamente en lugares donde no corra el riesgo de que le caigan gotas o le salpiquen líquidos, y no coloque ningún recipiente de líquidos encima del equipo.

ADVERTENCIA:

Mantenga siempre las tarjetas de memoria (accesorio opcional) o los accesorios (tornillos de montaje y tornillos de sujeción de la parte de montaje del panel de control) fuera del alcance de los bebés o los niños pequeños.

PRECAUCIÓN:

No quite la cubierta desatornillándola.
Las piezas del interior no requieren mantenimiento por parte del usuario.
Solicite las reparaciones al personal de servicio calificado.

PRECAUCIÓN:

Para reducir el riesgo de incendios e interferencias molestas, utilice solamente los accesorios recomendados.

PRECAUCIÓN:

Para reducir el riesgo de que se produzcan incendios, solicite que la instalación de las tarjetas de interfaz opcionales la realice personal de servicio cualificado.

PRECAUCIÓN:

Para mantener unas buenas condiciones de ventilación, no instale ni ponga este aparato en una librería, mueble empotrado u otro espacio reducido.
Para evitar el riesgo de incendio debido al recalentamiento, asegúrese de que las cortinas y otros materiales no obstruyan la ventilación.

PRECAUCIÓN:

No levante la unidad por el asa cuando está instalado el trípode. Si el trípode se encuentra instalado, su peso afectará también al asa de la unidad, lo que podría provocar la rotura del asa y ocasionar lesiones al usuario. Para transportar la unidad cuando el trípode está instalado, sosténgala por el trípode.

PRECAUCIÓN:

El uso de los auriculares con una presión de sonido excesiva puede provocar la pérdida de audición.

PRECAUCIÓN:

No mantenga la unidad en contacto directo con la piel durante largos periodos de tiempo cuando está en uso.
Es posible que se produzcan quemaduras de baja temperatura si la piel entra en contacto con las piezas de la unidad que se encuentran a temperaturas altas durante periodos de tiempo prolongados.
Si va a utilizar el equipo durante largos periodos de tiempo, emplee el trípode.

PRECAUCIÓN:

En el interior de la unidad se encuentra instalada una pila de botón.
No almacene la unidad a temperaturas superiores a los 60 °C.
No deje la unidad en un automóvil expuesto a la luz solar directa durante un periodo de tiempo prolongado con las puertas y ventanas cerradas.

PRECAUCIÓN:

No sacuda, balancee o agite la unidad por el asa cuando esté instalado el objetivo de conversión o cualquier otro accesorio.
Debido al peso adicional del objetivo de conversión, cualquier sacudida intensa del asa podría dañar la unidad o provocar daños personales.

Fabricado por: Panasonic Corporation, Osaka, Japón
Nombre y dirección del importador conforme a las normas de la UE:
Panasonic Marketing Europe GmbH
Panasonic Testing Centre
Winsbergring 11, 22525 Hamburg, Alemania

EXTRACCIÓN DE LA BATERÍA

Batería de Alimentación Principal (Batería de Ni-Cd / Ni-MH / Li-ion)

- Para extraer la batería, repita los pasos de la instalación de la misma, descritos en el manual, en el orden inverso.
- Si desea utilizar una batería de otro fabricante, compruebe las Instrucciones de Funcionamiento de dicha batería.

Batería de Reserva (Batería de Litio)

- Consulte en su establecimiento para obtener información sobre la eliminación de la batería al final de su vida útil.

EU

Eliminación de Aparatos Viejos y de Pilas y Baterías
Solamente para la Unión Europea y países con sistemas de reciclado.
Estos símbolos en los productos, su embalaje o en los documentos que los acompañen significan que los productos eléctricos y electrónicos y pilas y baterías usadas no deben mezclarse con los residuos domésticos.
Para el adecuado tratamiento, recuperación y reciclaje de los productos viejos y pilas y baterías usadas llévelos a los puntos de recogida de acuerdo con su legislación nacional.
Si los elimina correctamente ayudará a preservar valuosos recursos y evitará potenciales efectos negativos sobre la salud de las personas y sobre el medio ambiente.
Para más información sobre la recogida o reciclaje, por favor contacte con su ayuntamiento, su distribuidor o su proveedor.
Puede haber sanciones por una incorrecta eliminación de este residuo, de acuerdo con la legislación nacional.

Nota para el símbolo de pilas y baterías (símbolo debajo):
Este símbolo puede usarse en combinación con el símbolo químico. En este caso, cumple con los requisitos de la Directiva del producto químico indicado.

- SDXC logo is a trademark of SD-3C, LLC.
- All other names, company names, product names, etc., contained in this document are trademarks or registered trademarks of their respective owners.
- This product is licensed under the AVC Patent Portfolio License. All other acts are not licensed except private use for personal and non-profit purposes such as what are described below.
  - To record video in compliance with the AVC standard (AVC Video)
  - To play back AVC Video that was recorded by a consumer engaged in a personal and non-commercial activity
  - To play back AVC Video that was obtained from a video provider licensed to provide the video
    Visit the MPEG LA, LLC website (http://www.mpegla.com/) for details.
- Use of DCF Technologies under license from Multi-Format, Inc.
- The Apple ProRes codec module is used under license from Atomos.
- Atomos is a trademark or registered trademark of Atomos Global Pty. Ltd.

How to read this document

■ Illustrations

- Illustrations may differ from the actual product.

■ Conventions used in this manual

- Words and phrases in [ ] brackets indicate details and content displayed in the viewfinder or control panel.
- Words and phrases in < > brackets indicate design text used on this camera, such as button names.

■ Reference pages

- Reference pages in this document are indicated by (page 00).

■ Terminology

- SD memory card, SDHC memory card, and SDXC memory card are referred to as “SD memory card”.
- A memory card with the “P2” logo such as AJ-P2E060FG memory card (optional) is referred to as a “P2 memory card”.
- A memory card with the “expressP2” logo such as AU-XP0256AG memory card (optional) is referred to as a “expressP2 memory card”.
- P2 memory card and expressP2 memory card are referred to only as “P2 card” unless distinguished otherwise.

Contents

Read this first! **3**
Bitte lesen Sie zuerst diesen Hinweis! **7**
Lire ces informations en premier ! **9**
Leggere prima quanto segue! **11**
Lea esto primero **13**
Accessories **18**
Description of Parts **19**
Left side 19
Right side 21
Front 22
Rear 23
Top 24
Bottom 25
Mounting the module **26**
Mounting the control panel 26
Power supply **27**
Using the external DC power supply 27
Updating the camera firmware **29**
Updating the firmware 29
Storing **30**
Cautions when storing the camera recorder 30
Specifications **31**
General 31

■ Before using the camera, always check if the built-in battery is not consumed, and then set the date/time.

The internal clock of the camera is reset when the built-in battery has been consumed. This may result in the metadata of the clip not recorded correctly, and it may not display correctly in the thumbnail screen.

Check if the built-in battery is not consumed before using.

Also, set the correct date/time.

■ Software information about this product

1 **This product includes software licensed under GNU General Public License (GPL) and GNU Lesser General Public License (LGPL), and customers are hereby notified that they have rights to obtain, re-engineer, and redistribute the source code of these software.**

2 **This product includes software licensed under MIT-License.**

3 **This product includes software developed by the OpenSSL Project for use in the OpenSSL Toolkit (http://www.openssl.org/).**

4 **This product includes software licensed under OpenBSD License.**

5 **This product includes PHP, freely available from <http://www.php.net/>.**

6 **This software is based in part on the work of the Independent JPEG Group.**

7 **This product includes software licensed under MOZILLA PUBLIC LICENSE.**

For details on these descriptions (originally provided in English) and how to obtain the source code, visit the following website.

http://pro-av.panasonic.net/

We do not accept inquiries about the details of the source code obtained by the customer.

Accessories

- Mount cap (already attached to the camera module)
- Control panel
- Control panel mounting part
- Glass for IR recording
- Control panel mounting part clamping screw (4 pcs.)

NOTE

- After unpacking the product, dispose of the packing material properly.

Description of Parts

Left side

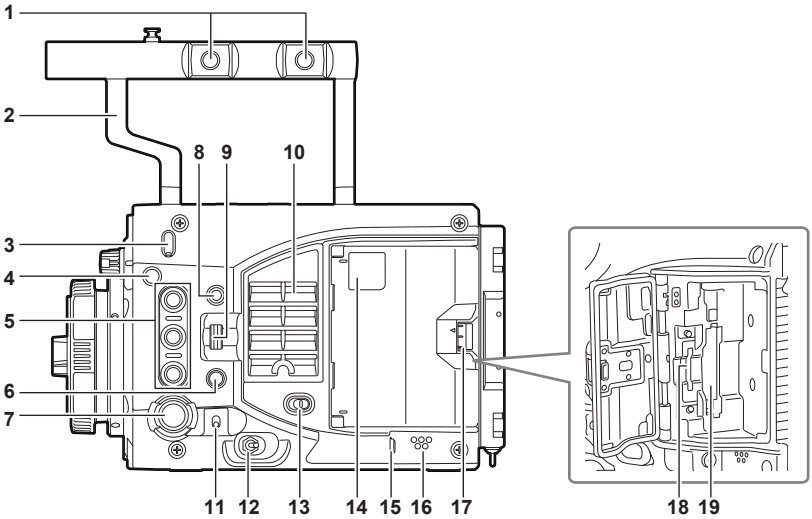

1 **Accessory mounting holes**
For attaching accessories.
- Mounting hole size
  - 3/8-16 UNC

2 **Handle**

3 **Lens flange back adjustment hole**
Used when adjusting the lens flange back.

4 **Focus hook/focus mark <ϕ>**
Indicate the focal plane of the MOS sensor.

5 **USER buttons (<USER 1>/<PLAY>, <USER 2>/<INFO>, <USER 3>/<EXIT>)**
User-selected functions can be assigned to each button. Pressing a button performs the assigned function.
This will have the same operation as the <PLAY>/<INFO>/<EXIT> buttons with orange text when the system check screen or the menu screen is displayed. In such case, this will not operate as USER buttons.

6 **<SYSTEM CHK> button**
Displays the system check screen in the <VF SDI> terminal output.

7 **<REC> button**
Press this button to start recording. Press this button again to stop recording. The button lights up in red during recording.

8 **<MENU> button**
Displays the setting menu in the <VF SDI> terminal output and the control panel screen.

9 **<IRIS/SEL> dial button**
Controls the iris of the EF lens.
This will function as the menu selection dial when the menu screen is displayed.

10 Fan inlet

Fan inlet for dissipating heat. Do not block this when the camera is in use.

11 <TOGGLE/WB> switch

[WB]/[EI]/[SHUTTER] can be assigned.
[WB] is assigned as the factory setting.
Press and hold upward to operate the automatic white balance.

12 Power switch

Used to switch the power to on <I> or to standby <⏻>.
The camera is not completely disconnected from the main power even when the power switch is set to the <⏻> position.

13 <LOCK> switch

Disables the operation of the buttons and switches at the left side of the camera.
Sets the button and switch to disable the operation in [MENU] → [SYSTEM SETTINGS] → [SIDE LOCK].
Keep this in the <🔒> position to prevent incorrect operation when moving the camera, etc.

14 Card slot access LED

Displays the access status of recording and playback of the card inserted in the main slot and the sub slot.
Top: Main slot
Bottom: Sub slot
The access status of the file operation is also displayed for the sub slot.

15 <PHONES> terminal

Connecting terminal of headphones for audio monitor. (Stereo mini jack)

16 Speaker

EE audio can be monitored during recording while playback audio can be monitored during playback.
The alarm is output in sync with flashing/lighting of the warning indicator.
Audio from the speaker automatically is turned off when headphones are connected to the <PHONES> terminal.

17 Card slot open/close switch

Opens the card slot cover.

18 Sub slot

Slot for SD memory cards (optional).

19 Main slot

Slot for P2 card.

Right side

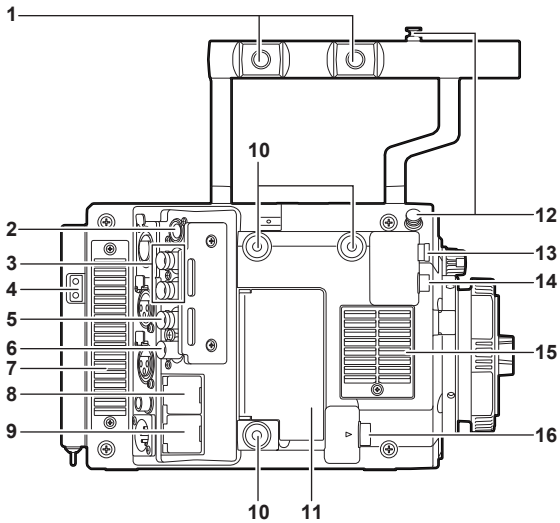

1 Accessory mounting holes
For attaching accessories.
- Mounting hole size
  - 3/8-16 UNC

2 <CONTROL PANEL> terminal
A terminal to connect the control panel.

3 <SDI OUT1>/<SDI OUT2> terminal
Output terminals of 3G/HD SDI for video monitor.
For the cable to connect to this terminal, prepare a double-shielded cable equivalent to 5C-FB.

4 Power supply output terminal for lighting
Power supply terminal when light is connected.

5 <GENLOCK IN> terminal
Inputs reference signals when setting the genlock on the camera unit or when externally locking the time code. The input signal is 3G/HD-SDI.
For the cable to connect to this terminal, prepare a double-shielded cable equivalent to 5C-FB.

6 <TC IN/OUT> terminal
Connects to the time code input terminal of the external device when locking the time code of the external device to the time code on the camera.
Inputs the standard time code when locking with the time code of the external device.
For the cable to connect to this terminal, prepare a double-shielded cable equivalent to 5C-FB.

7 Fan outlet
Fan outlet for dissipating heat. Do not block this when the camera is in use.

8 <LAN> terminal
For connecting a LAN (100BASE-TX) cable.
Use the shielded cross cable for the cable to connect to this terminal.

9 <USB DEVICE> terminal
USB device terminal for connecting a USB 2.0 cable.
For the cable to connect to this terminal, prepare a double-shielded cable.

10 Accessory mounting holes

For attaching accessories.

- Mounting hole size
  - 1/4-20 UNC (screw length 5.5 mm or shorter)

11 <USB HOST> terminal (inside the cover, 5.0 V 0.5 A max)

For mounting the wireless module AJ-WM30 (optional).
For the cable to connect to this terminal, prepare a double-shielded cable.

12 Focus hook

Indicate the focal plane of the MOS sensor. It provides a reference for measuring the accurate focal length from the subject.

13 <VF SDI> terminal

An output terminal of 3G/HD SDI for connecting the viewfinder.
Use the BNC cable supplied with the viewfinder or the double-shielded cable equivalent to 5C-FB when connecting a cable to this terminal.

14 <DC OUT> terminal

An output terminal to supply viewfinder power supply DC 12 V. Maximum of 1.0 A current can be provided.
Use the DC cable supplied with the viewfinder when connecting a cable to this terminal.

15 Fan inlet

Fan inlet for dissipating heat. Do not block this when the camera is in use.

16 <LENS/GRIP> terminal

Terminal for connecting a lens cable. For details, refer to the Operating Instructions for the lens.
Cable for the grip module AU-VGRP1G (optional) can also be connected.

Front

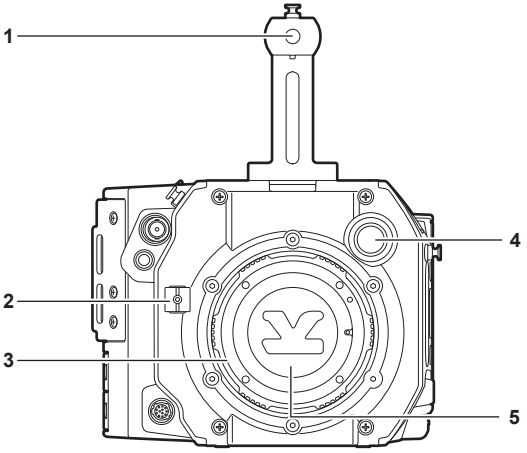

1 Accessory mounting holes

For attaching accessories.

- Mounting hole size
  - 3/8-16 UNC (screw length 5.5 mm or shorter)

2 Lens cable clamp

A clamp for securing the lens cable.

3 EF lens mount
EF lens is mounted.

4 <FILTER> dial
<1><CLEAR>: Does not use the ND filter.
<2><0.6ND>: Reduces the amount of light entering the MOS sensor to 1/4.
<3><1.2ND>: Reduces the amount of light entering the MOS sensor to 1/16.
<4><1.8ND>: Reduces the amount of light entering the MOS sensor to 1/64.

5 Mount cap
Attach the cap when the lens is not mounted.

Rear

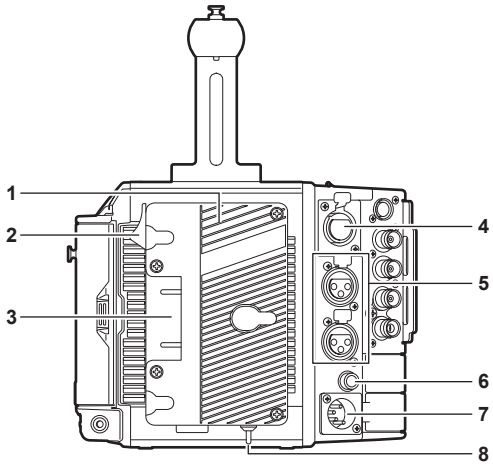

1 Battery holder
For mounting Anton/Bauer batteries.

2 Battery release lever
Pull this battery release lever down to release the battery.

3 Battery contact terminals
Contact terminals for the battery.

4 <INPUT 1/2> terminal
Terminal for connecting a microphone.

5 <INPUT 3>/<INPUT 4> terminal
Connect the audio equipment or the microphone.

6 <DC OUT/RS> terminal
Terminal for DC 12 V output and REC trigger input. The DC output provides a maximum current of 1.0 A.

7 <DC IN> terminal
Input terminal for connecting an external DC power supply.

8 <LIGHT CONTROL> switch
Control switch when light is connected to the light output terminal.

Top

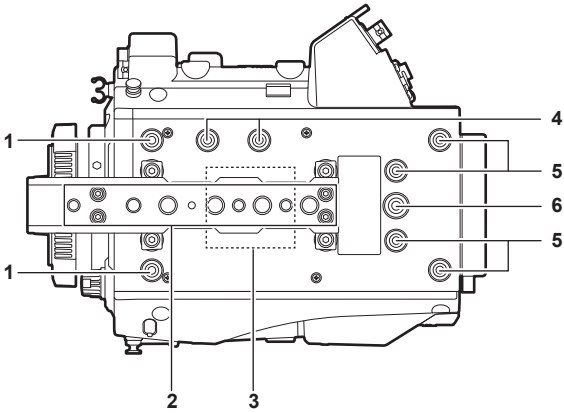

1 Viewfinder mounting holes
For attaching the viewfinder.

2 Accessory mounting holes
For attaching accessories.
- Mounting hole size
  - 1/4-20 UNC
  - 3/8-16 UNC

3 GPS module position
This part has a built-in GPS module. Do not cover this part with metallic objects when the GPS is in use.

4 Microphone holder mounting position

5 Mounting hole for control panel mounting part

6 Accessory mounting holes
For attaching accessories.
- Mounting hole size
  - 1/4-20 UNC (screw length 5.5 mm or shorter)

Bottom

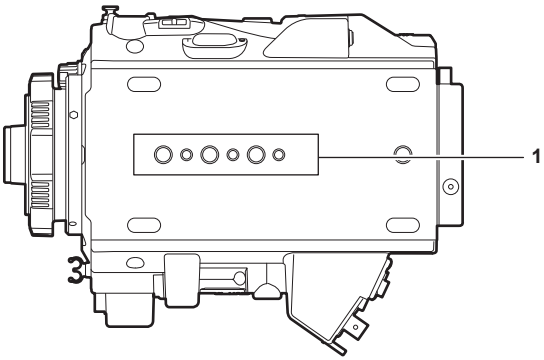

1 Shoulder mount module/tripod mounting holes

For attaching the shoulder mount module or a tripod.

- Mounting hole size
  - 1/4-20 UNC (screw length 5.5 mm or shorter)
  - 3/8-16 UNC (screw length 5.5 mm or shorter)

Mounting the module

Mounting the control panel

The control panel is used by connecting the control panel cable to the <CONTROL PANEL> terminal at the rear of the camera.

Normal operation may not be possible when the control panel is mounted or removed while the power is turned on.

Set the power switch to <⏻> when mounting or removing the control panel.

It can be mounted to the rear of the camera using the supplied dedicated mounting part.

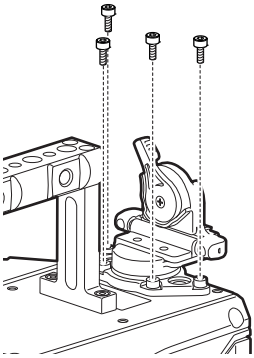

Fig. 1

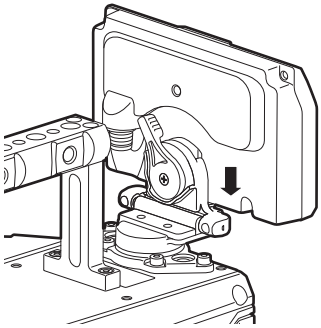

Fig. 2

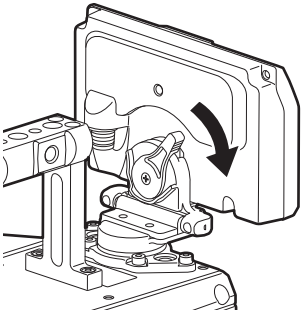

Fig. 3

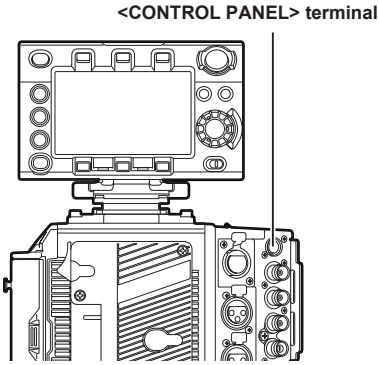

Fig. 4

1 Mount the control panel mounting part using the four supplied screws. (Fig. 1)

2 Mount the control panel onto the control panel mounting part. (Fig. 2)

3 Push down the lock lever to the right to lock. (Fig. 3)

4 Connect the cable of the control panel to the <CONTROL PANEL> terminal. (Fig. 4)

Power supply

Using the external DC power supply

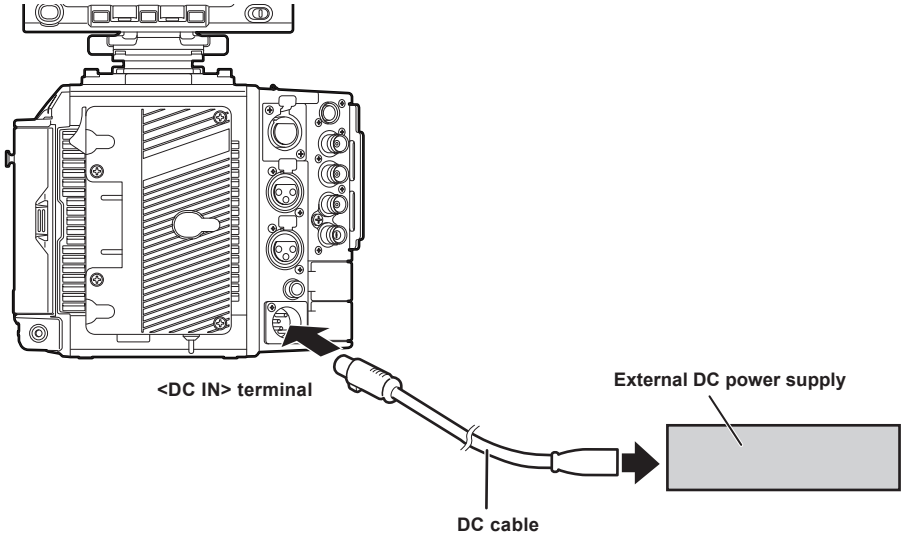

1 **Connect the external DC power supply to the <DC IN> terminal of the camera.**

2 **Turn on the power switch of the external DC power supply (if the external DC power supply has a power switch).**

3 **Turn the power switch of the camera to <I>.**

■ External DC power supply

Connect after making sure that the output voltage of the external DC power supply is compatible with the rated voltage of the camera.
Select an output amperage for the external DC power supply with a margin above the total amperage of the connected devices.
The total amperage of connected devices can be calculated with the following formula.
Total power consumption ÷ Voltage
When the power of the camera is turned on, inrush current is generated. Insufficient power supply when turning on the power may cause a malfunction. We recommend that you use an external DC power supply that can assure double the capacity of the total power consumption of the camera and connected devices that are turned on by interlock when the power of the camera is turned on (such as lenses). For the DC cable, use a dual-core shielded wire of AWG16 (nominal cross section area 1.309 mm^2) or thicker.

- Make sure of the pin alignment of the DC output terminal of the external DC power supply and the camera <DC IN> terminal, and connect the polarity correctly.
  If the +12 V power supply is mistakenly connected to the GND terminal, it may cause fire or malfunction.

DC IN		
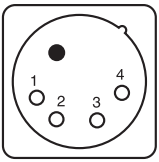	1	GND
	2	NC
	3	NC
	4	+12 V
	Panasonic Parts No.: K1AA104H0038 Manufacturer Parts No.: HA16RX-4P (SW1) (76) (Hirose Electric Co.)	

NOTE

- When both the battery and the external DC power supply are connected, the power supply from the external DC power supply has priority. The battery may be removed while using the external DC power supply.
- When using the external DC power supply, always turn on the power switch of the external DC power supply before setting the power switch of the camera to <I>. If the operations are performed in reverse, the camera may malfunction because the external DC power supply output voltage rises too slowly.
- When switching the power supply from an external DC power supply to the battery, carefully remove the DC cable from the <DC IN> terminal. Removing the cable quickly may temporarily stop the camera's operation.
- When power is supplied from the <DC IN> terminal, the light circuit does not function. The light circuit can be used only when power is supplied from the Anton/Bauer battery plate.
- When connecting a battery to the <DC IN> terminal, set [MENU] → [SYSTEM SETTINGS] → [POWER MANAGEMENT] → [DC IN SOURCE] to [BATTERY], then set [- FULL VOLT], [- NEAR END VOLT], or [- END VOLT] to match the characteristics of the battery. However, in this the case, the percent (%) display will not be available for batteries with a battery level indicator function.

Updating the camera firmware

Updating the firmware

To update the firmware, an SD memory card is required.
Use the camera or P2 Viewer Plus to format the SD memory card.

Fig. 1

1 Download the firmware from the website.

http://pro-av.panasonic.net/

2 Save the downloaded firmware to an SD memory card.

3 Insert the SD memory card with the firmware into the sub slot.

4 Turn the power on.

5 Press the <INFO> button to display the INFO screen. (Fig. 1)

6 Select [VERSION].

7 Press the jog dial button.

8 When [UPDATE] appears, select [UPDATE] → [OK].

This starts the firmware update. Do not turn the power off until the update is completed.

NOTE

- The time required for update is approximately 30 minutes. It is necessary to supply power without interruption during the update. Use the external DC power supply instead of battery.
- Do not remove the SD memory card during the update (while the card access LED is flashing). The communication with the camera may be discontinued, which may cause malfunction to the camera.
- Update is possible even if the card slot cover is opened.
- Even if [REC IMPOSSIBLE] error is displayed, update is possible when the firmware is saved in the specified folder of the SD memory card.

- Update is also possible from [MENU] → [SYSTEM SETTINGS] → [INFORMATION] → [UPDATE].

Storing

Cautions when storing the camera recorder

Remove the battery when storing. Store each in a location with low humidity and that the temperature is relatively constant.

■ Camera body

- Wrap the camera recorder with a soft cloth so that dust does not get into it.

■ Battery

- The battery life shortens where the temperature is extremely high or low.
- Storing in a place where there is heavy oil smoke or dust may lead to malfunctions due to rust on terminal connectors, etc.
- Do not let the battery terminal contact a metal object (such as a necklace or hairpin). Short circuit may occur between terminals and it may lead to heat generation. Touching on a heated part may cause severe burns.
- Store the battery with electrically discharged. When storing the camera for a long period of time, it is recommended to charge it once a year, use up the full capacity of the battery using the camera, and then store it again.

■ P2 card

- If you remove it from the camera recorder, be sure to attach the dedicated cap so that sand and dust do not adhere to the connector part. Also, put it in the dedicated case when storing or carrying it.
- Do not place it in a place where there is corrosive gas.

■ SD memory card

- If you remove it from the camera recorder, be sure to put it in its case.
- Do not place it in a place where there is corrosive gas.
- Do not place it in a place where temperature gets high, such as in a car or under direct sunlight.
- Do not place it in a dusty place or where humidity is high.

Specifications

For details on specifications, visit the Panasonic website (http://pro-av.panasonic.net/en/manual/index.html) and refer to the Operating Guide (HTML version).

General

Power
DC ⎓ 12 V (11.0 V – 17.0 V)
Power consumption
47 W (body only)
77 W (with all optional accessories connected and maximum power supplied from each output terminal)

indicates safety information.

Ambient operating temperature	0 °C - 40 °C (32 °F - 104 °F)
Ambient operating humidity	10% - 85% (no condensation)
Storage temperature	–20 °C - 60 °C (–4 °F - 140 °F)
Weight	Approx. 2.7 kg (6.0 lbs.) (excluding handle and accessories) Approx. 3.0 kg (6.6 lbs.) (including handle, excluding accessories)
Dimensions (W×H×D)	184.0 mm × 230.5 mm × 247.0 mm (7-1/4 inches × 9-3/32 inches × 9-3/4 inches) (excluding protrusions and accessories)

- Ensure that the total current from the <DC OUT> terminal, <VF SDI> terminal, <LENS/GRIP> terminal, <DC OUT/RS> terminal, and <USB HOST> terminal does not exceed 30 W.

Panasonic Corporation
Web Site: http://www.panasonic.com

© Panasonic Corporation 2016